FlexTester *for micronewton-nanometer mechanical testing*

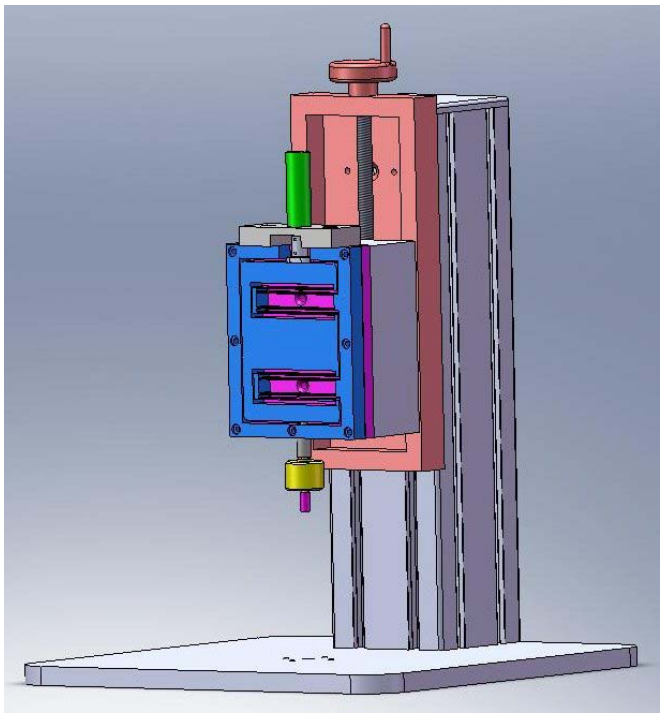

FlexTester measures the mechanical properties of very small specimens or components which often require a microscope for viewing. It records force-deflection data to micronewton force and nanometer displacement levels. *FlexTester* can be equipped with probes and clamps for indentation, scratching, pushing, pulling and bending. It can also be equipped with a microscope, temperature chamber or bath for testing your samples under a variety of conditions. Each system is custom engineered to meet your needs. Typical uses include determining the force-deflection properties of biomaterials, composites, tiny components, medical devices, lenses and more. *FlexTester* includes ADMET's MTESTQuattro™ PC based materials testing system. MTESTQuattro™ features force, position, two strain and one auxiliary input to satisfy a variety of testing needs. It features a fast acting microprocessor for precise closed-loop control of ramp, cyclic and complex control profiles. All results and raw data can be exported to a database or spreadsheet program. Third party programs can also access the XY data in real-time. Ideal for combining mechanical data with data from other pieces of equipment.

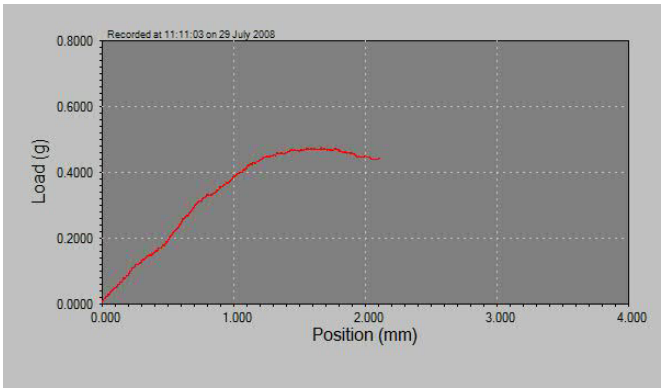

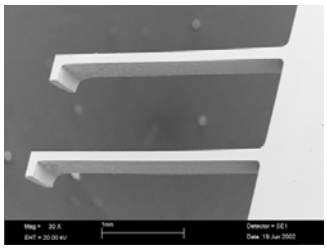

Top: Force-Displacement curve generated from MTESTQuattro™. Bottom: Contact lens(left) and microcantilever(right) test specimens.

FlexTester with MTESTQuattroTM, microscope and water bath in temperature controlled chamber.

51 Morgan Drive Norwood, MA 02062
Tel: (781) 769-0850 Fax: (781) 769-0884
sales@ADMET.com www.ADMET.com

For a Total Solution to all of your Materials Testing Needs

Copyright (c) 2008. ADMET, Inc. Norwood, MA, USA. All Rights Reserved.